REILLY ARCHITECTURAL

SERIES 4170 INSWING CASEMENT WINDOW (HVHZ)(IMPACT)

GENERAL NOTES:

1. THE PRODUCT SHOWN HEREIN IS DESIGNED AND MANUFACTURED TO COMPLY WITH THE CURRENT EDITION OF THE FLORIDA BUILDING CODE (FBC), **INCLUDING** HVHZ AND HAS BEEN EVALUATED ACCORDING TO THE FOLLOWING:
   - TAS 201-94
   - TAS 202-94
   - TAS 203-94

2. ADEQUACY OF THE EXISTING STRUCTURAL CONCRETE/MASONRY, 2X FRAMING, AND METAL FRAMING AS A MAIN WIND FORCE RESISTING SYSTEM CAPABLE OF WITHSTANDING AND TRANSFERRING APPLIED PRODUCT LOADS TO THE FOUNDATION IS THE RESPONSIBILITY OF THE ENGINEER OR ARCHITECT OF RECORD FOR THE PROJECT OF INSTALLATION.

3. 1X AND 2X BUCKS (WHEN USED) SHALL BE DESIGNED AND ANCHORED TO PROPERLY TRANSFER ALL LOADS TO THE STRUCTURE. BUCK DESIGN AND INSTALLATION IS THE RESPONSIBILITY OF THE ENGINEER OR ARCHITECT OF RECORD FOR THE PROJECT OF INSTALLATION.

4. THE INSTALLATION DETAILS DESCRIBED HEREIN ARE GENERIC AND MAY NOT REFLECT ACTUAL CONDITIONS FOR A SPECIFIC SITE. IF SITE CONDITIONS CAUSE INSTALLATION TO DEVIATE FROM THE REQUIREMENTS DETAILED HEREIN, A LICENSED ENGINEER OR ARCHITECT SHALL PREPARE SITE SPECIFIC DOCUMENTS FOR USE WITH THIS DOCUMENT.

5. APPROVED IMPACT PROTECTIVE SYSTEM **IS NOT REQUIRED** ON THIS PRODUCT IN AREAS REQUIRING IMPACT RESISTANCE.

6. WINDOW FRAME MATERIAL: MAHOGANY

7. GLASS MEETS THE REQUIREMENTS OF ASTM E1300 GLASS CHARTS. SEE SHEET 2 FOR GLAZING DETAILS.

INSTALLATION NOTES:

1. ONE (1) INSTALLATION ANCHOR IS REQUIRED AT EACH ANCHOR LOCATION SHOWN, UNLESS OTHERWISE STATED ON SHEET 5.

2. INSTALL INDIVIDUAL INSTALLATION ANCHORS WITHIN A TOLERANCE OF ±1/2 INCH THE DEPICTED LOCATION & SPACING IN THE ANCHOR LAYOUT DETAILS (I.E., WITHOUT CONSIDERATION OF TOLERANCES). TOLERANCES ARE NOT CUMULATIVE FROM ONE INSTALLATION ANCHOR TO THE NEXT.

3. SHIM AS REQUIRED AT EACH INSTALLATION ANCHOR WITH LOAD BEARING SHIM(S). MAXIMUM ALLOWABLE SHIM STACK TO BE 1/2 INCH. SHIM WHERE SPACE OF 1/16 INCH OR GREATER OCCURS. SHIM(S) SHALL BE CONSTRUCTED OF HIGH DENSITY PLASTIC OR BETTER.

4. MINIMUM EMBEDMENT AND EDGE DISTANCE EXCLUDE WALL FINISHES, INCLUDING BUT NOT LIMITED TO STUCCO, FOAM, BRICK VENEER, AND SIDING.

5. INSTALLATION ANCHORS AND ASSOCIATED HARDWARE MUST BE MADE OF CORROSION RESISTANT MATERIAL OR HAVE A CORROSION RESISTANT COATING:
   - FASTENERS USED WITHIN 3,000 FEET OF A SALTWATER COASTLINE AND INSTALLED IN ENCLOSED SPACES SHALL BE GALVANIZED IN ACCORDANCE WITH SECTION 1711.1.1 (E.G., ASTM A153 CLASS D, ASTM A641 CLASS 3S, OR EQUIVALENT CORROSION RESISTANCE).
   - CONNECTORS AND METAL PLATES USED WITHIN 3,000 FEET OF A SALTWATER COASTLINE SHALL BE STANDARD GALVANIZED IN ACCORDANCE WITH SECTION 1711.1.2 (E.G., ASTM A653 G90, ASTM A123, OR PROTECTIVE COATING PER TPI 1).

6. FOR MASONRY OR CONCRETE OPENINGS, A 1X WOOD BUCK MAY BE USED (OPTIONAL) AS LONG AS THE MINIMUM EMBEDMENT AND EDGE DISTANCE REQUIREMENTS ARE STILL MET WITHIN THE CORRESPONDING HOST SUBSTRATE. SEE GENERAL NOTE #3 ON SHEET 1 FOR MORE INFORMATION.

7. FOR HOLLOW BLOCK AND GROUT FILLED BLOCK, DO NOT INSTALL INSTALLATION ANCHORS INTO MORTAR JOINTS. EDGE DISTANCE IS MEASURED FROM FREE EDGE OF BLOCK OR EDGE OF MORTAR JOINT INTO FACE SHELL OF BLOCK.

8. INSTALLATION ANCHORS SHALL BE INSTALLED IN ACCORDANCE WITH ANCHOR MANUFACTURER'S INSTALLATION INSTRUCTIONS, AND ANCHORS SHALL NOT BE USED IN SUBSTRATES WITH STRENGTHS LESS THAN THE MINIMUM STRENGTH SPECIFIED BY THE ANCHOR MANUFACTURER.

TABLE OF CONTENTS

SHEET	SHEET DESCRIPTION
1	GENERAL NOTES AND INSTALLATION NOTES
2	GLAZING DETAILS
3	ELEVATIONS
4	ELEVATION & QUALIFIED CONFIGURATIONS
5	ANCHOR LAYOUTS
6	ANCHOR LAYOUTS & LOCK QUANTITY TABLE
7	VERTICAL SECTIONS
8	HORIZONTAL SECTIONS
9	ANCHOR DETAILS & ANCHOR SCHEDULE
10	BILL OF MATERIALS & COMPONENTS

DESIGN PRESSURE RATING (PSF)

WIDTH (IN.)	HEIGHT (IN.)	CONFIGURATION	DESIGN PRESSURE	MISSILE IMPACT RATING
79-1/4"	96-1/8"	XX	+70/-75	LARGE & SMALL MISSILE IMPACT
41-1/4"	96-1/8"	X	+70/-75	
79-1/4"	168-3/8"	O/XX/O	+70/-75	

REILLY ARCHITECTURAL
901 BURMAN BLVD, BUILDING 701
CALVERTON, NY 11933
PH: 631-208-0710 FAX: 631-208-0711
EMAIL: WWW.REILLYARCH.COM

TITLE: SERIES 4170 INSWING CASEMENT WINDOW (HVHZ)(IMPACT) GENERAL NOTES & INSTALLATION NOTES

PREPARED BY: BUILDING DROPS, INC.
1900 NE MIAMI COURT, STE. 2-15
MIAMI, FL 33132
PH: (954)399-8478
FAX: (954)744.4738
WEB: www.buildingdrops.com

REMARKS	BY	DATE
2026 FBC UPDATE	LS	06/26

THE INSTALLATION DETAILS DESCRIBED HEREIN ARE GENERIC AND MAY NOT REFLECT ACTUAL CONDITIONS FOR A SPECIFIC SITE. IF SITE CONDITIONS CAUSE INSTALLATION TO DEVIATE FROM THE REQUIREMENTS DETAILED HEREIN, A LICENSED ENGINEER OR ARCHITECT SHALL PREPARE SITE SPECIFIC DOCUMENTS FOR USE WITH THIS DOCUMENT.

Digitally signed by Hermes F. Norero, P.E.
Reason: I am approving this document
Date: 2026.03.13 14:43:17 +02'00'

HERMES F. NORERO
LICENSE
No. 73778
STATE OF FLORIDA
PROFESSIONAL ENGINEER

HERMES F. NORERO, P.E.
FLORIDA LICENSE NO. 73778
BUILDING DROPS, INC.
1900 NE MIAMI COURT, STE. 2-15
MIAMI, FL 33132
FBPE CERT. OF AUTHORIZATION No. 29578

FL #: FL48048

DATE: 03.11.2026

DWG. BY: DB | CHK. BY: HFN

SCALE: NTS

DWG. #: RWD032

SHEET: 1 OF 10 | REV. A

7/9/2026 3:17 PM
c:\users\lucianosanchez\building drops, inc\building drops landing - documents\common\projects\2026 code change projects\reilly architectural\cc-26-0587.1 - 2026 code change\dwgs\fl48048-r1\rwd032.dwg

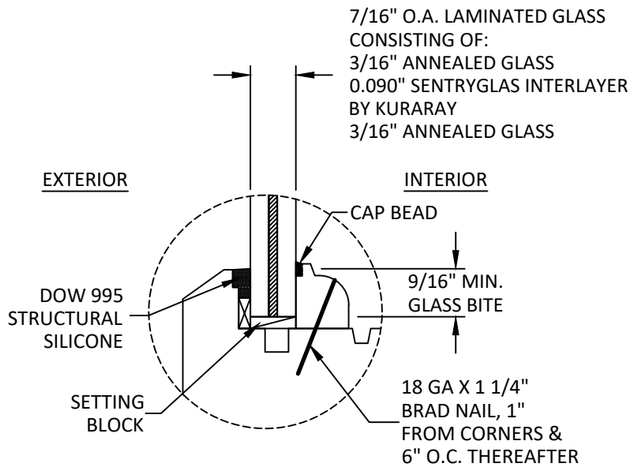

GLAZING DETAIL 1

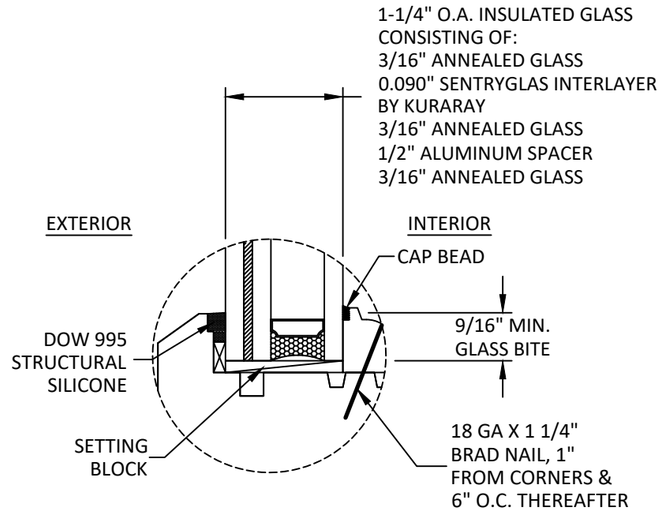

GLAZING DETAIL 2

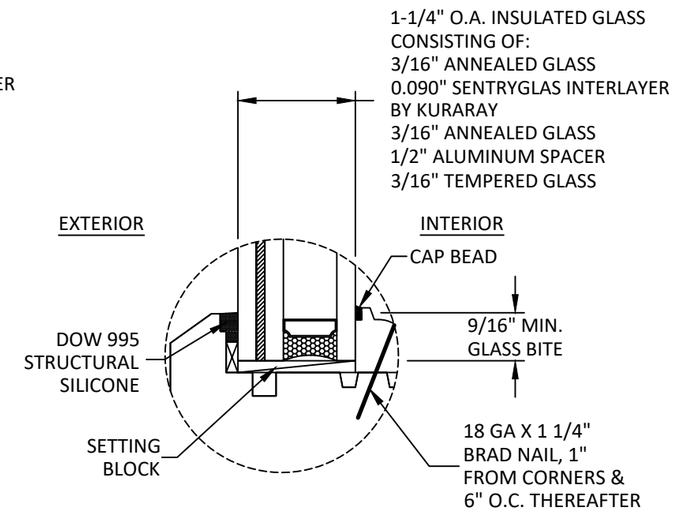

GLAZING DETAIL 3

GLAZING NOTES:

1. GLASS TYPE COMPLIES WITH ASTM E1300 REQUIREMENTS. PER THE FBC, TEMPER AND SAFETY GLAZING REQUIREMENTS SHALL BE REVIEWED ON A SITE SPECIFIC BASIS.
2. SETTING BLOCK DUROMETER HARDNESS OF 70-90 (SHORE A) AS REFERENCED IN FBC CHAPTER 24.
3. SETTING BLOCKS TO BE LOCATED AT 1/4 SPAN LENGTH FOR GLASS WIDER THAN 36" AS PER FBC CHAPTER 24.
4. D.L.O. AND DESIGN PRESSURES MAY NOT EXCEED MAX VALUES SHOWN HEREIN.
5. ALTERNATE GLAZING BEADS QUALIFIED AS LONG AS THE MOMENT OF INERTIA VALUE OF THE DESIRED BEAD IS EQUAL TO OR GREATER THAN THE TESTED BEAD SHOWN ON THE RIGHT.

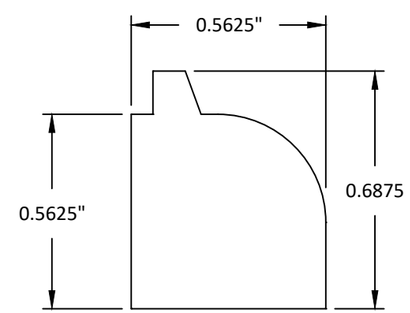

MOMENT OF INERTIA ABOUT THE Y-AXIS = 0.0076 IN^4

REILLY ARCHITECTURAL
901 BURMAN BLVD, BUILDING 701
CALVERTON, NY 11933
PH: 631-208-0710 FAX: 631-208-0711
EMAIL: WWW.REILLYARCH.COM

TITLE: SERIES 4170 INSWING CASEMENT WINDOW (HVHZ)(IMPACT) GLAZING DETAILS

PREPARED BY: BUILDING DROPS, INC.
1900 NE MIAMI COURT, STE. 2-15
MIAMI, FL 33132
PH: (954)399-8478
FAX: (954)744.4738
WEB: www.buildingdrops.com

REMARKS	BY	DATE
2026 FBC UPDATE	LS	06/26

THE INSTALLATION DETAILS DESCRIBED HEREIN ARE GENERIC AND MAY NOT REFLECT ACTUAL CONDITIONS FOR A SPECIFIC SITE. IF SITE CONDITIONS CAUSE INSTALLATION TO DEVIATE FROM THE REQUIREMENTS DETAILED HEREIN, A LICENSED ENGINEER OR ARCHITECT SHALL PREPARE SITE SPECIFIC DOCUMENTS FOR USE WITH THIS DOCUMENT.

HERMES F. NORERO LICENSE No. 73778 STATE OF FLORIDA PROFESSIONAL ENGINEER

HERMES F. NORERO, P.E.
FLORIDA P.E. LICENSE No. 73778
BUILDING DROPS, INC.
1900 NE MIAMI COURT, STE. 2-15
MIAMI, FL 33132
FBPE CERT. OF AUTHORIZATION No. 29578

FL #: FL48048

DATE: 03.11.2026

DWG. BY: DB

CHK. BY: HFN

SCALE: NTS

DWG. #: RWD032

SHEET: 2 OF 10

REV. A

7/9/2026 3:17 PM
c:\users\lucianosanchez\building drops, inc\building drops landing - documents\common\projects\2026 code change projects\reilly architectural\cc-26-0587.1 - 2026 code change\dwgs\fl48048-r1\rwd032.dwg

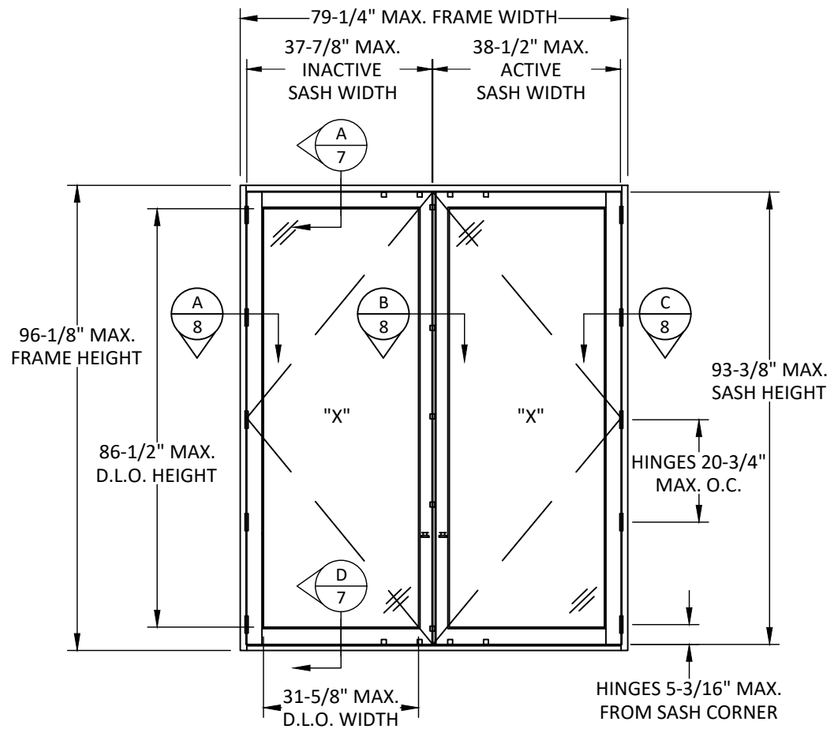

ELEVATION
FRENCH CASEMENT

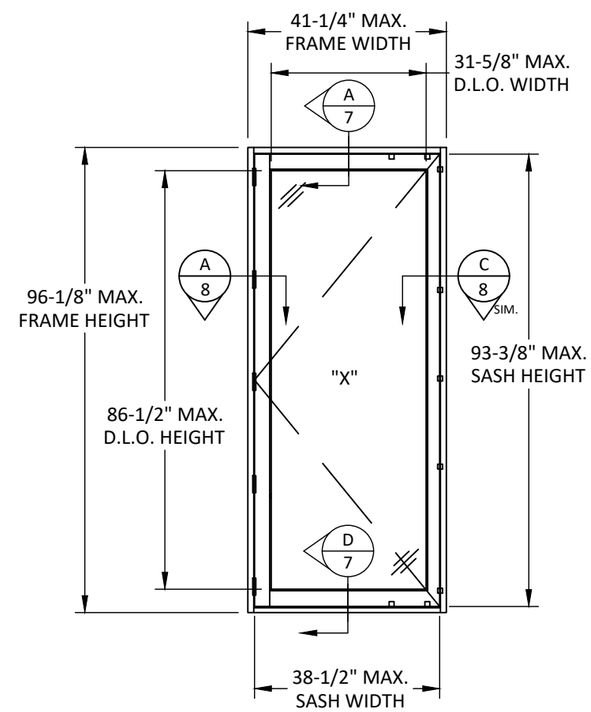

ELEVATION
SINGLE CASEMENT

NOTE:
- HARDWARE - FOURTEEN (14) CAM LOCKS TOTAL FOR FRENCH CASEMENTS AND TEN (10) CAM LOCKS TOTAL FOR SINGLE CASEMENTS.

REILLY ARCHITECTURAL
901 BURMAN BLVD, BUILDING 701
CALVERTON, NY 11933
PH: 631-208-0710 FAX: 631-208-0711
EMAIL: WWW.REILLYARCH.COM

TITLE: SERIES 4170 INSWING CASEMENT WINDOW (HVHZ)(IMPACT) ELEVATIONS

PREPARED BY: BUILDING DROPS, INC.
1900 NE MIAMI COURT, STE. 2-15
MIAMI, FL 33132
PH: (954)399-8478
FAX: (954)744.4738
WEB: www.buildingdrops.com

REMARKS	BY	DATE
2026 FBC UPDATE	LS	06/26

THE INSTALLATION DETAILS DESCRIBED HEREIN ARE GENERIC AND MAY NOT REFLECT ACTUAL CONDITIONS FOR A SPECIFIC SITE. IF SITE CONDITIONS CAUSE INSTALLATION TO DEVIATE FROM THE REQUIREMENTS DETAILED HEREIN, A LICENSED ENGINEER OR ARCHITECT SHALL PREPARE SITE SPECIFIC DOCUMENTS FOR USE WITH THIS DOCUMENT.

HERMES F. NORERO LICENSE No. 73778 STATE OF FLORIDA PROFESSIONAL ENGINEER

HERMES F. NORERO, P.E.
FLORIDA P.E. No. 73778
BUILDING DROPS, INC.
1900 NE MIAMI COURT, STE. 2-15
MIAMI, FL 33132
FBPE CERT. OF AUTHORIZATION No. 29578

FL #: FL48048

DATE: 03.11.2026

DWG. BY: DB | CHK. BY: HFN

SCALE: NTS

DWG. #: RWD032

SHEET: 3 OF 10 | REV. A

7/9/2026 3:17 PM
c:\users\lucianosanchez\building drops, inc\building drops landing - documents\common\projects\2026 code change projects\reilly architectural\cc-26-0587.1 - 2026 code change\dwgs\fl48048-r1\rwd032.dwg

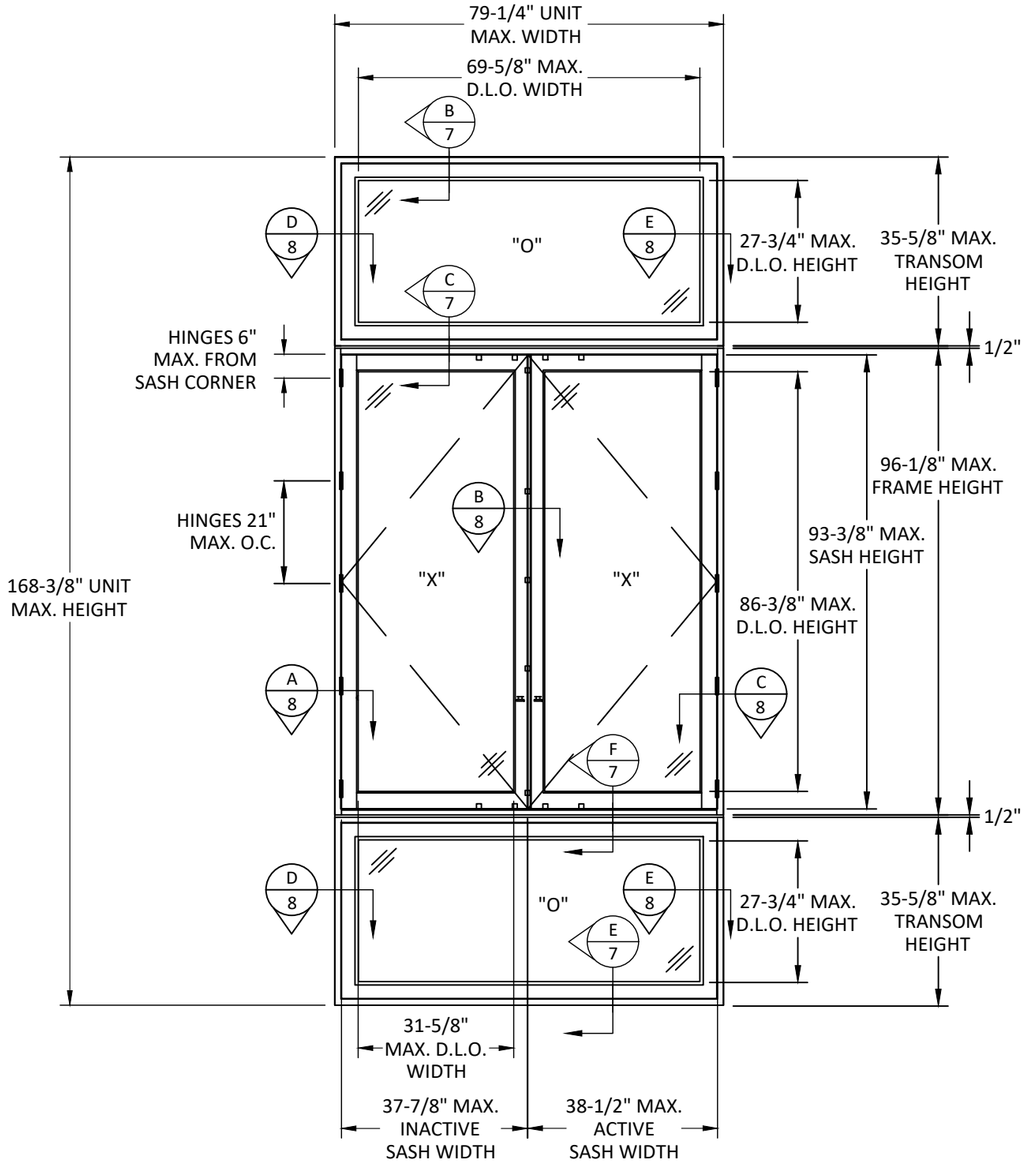

ELEVATION

FRENCH CASEMENT WITH TRANSOMS

HARDWARE NOTES:
1) EACH CASEMENT SASH SHALL UTILIZE BRASS OR STAINLESS STEEL BUTT HINGES ACCORDING TO MAX O.C. SPACING DESIGNATED ABOVE
2) CASEMENT SASHES SHALL UTILIZE SIEGENIA MULTIPOINT LOCKING HARDWARE
3) SEE SHEET 6 FOR LOCK QUANTITY REQUIREMENTS

HINGE QUANTITY REQUIREMENTS	
FRAME HEIGHT	QTY.
FH > 75⅜"	5
75⅜" ≥ FH > 54⅝"	4
54⅝" ≥ FH > 33⅞"	3
33⅞" ≥ FH	2

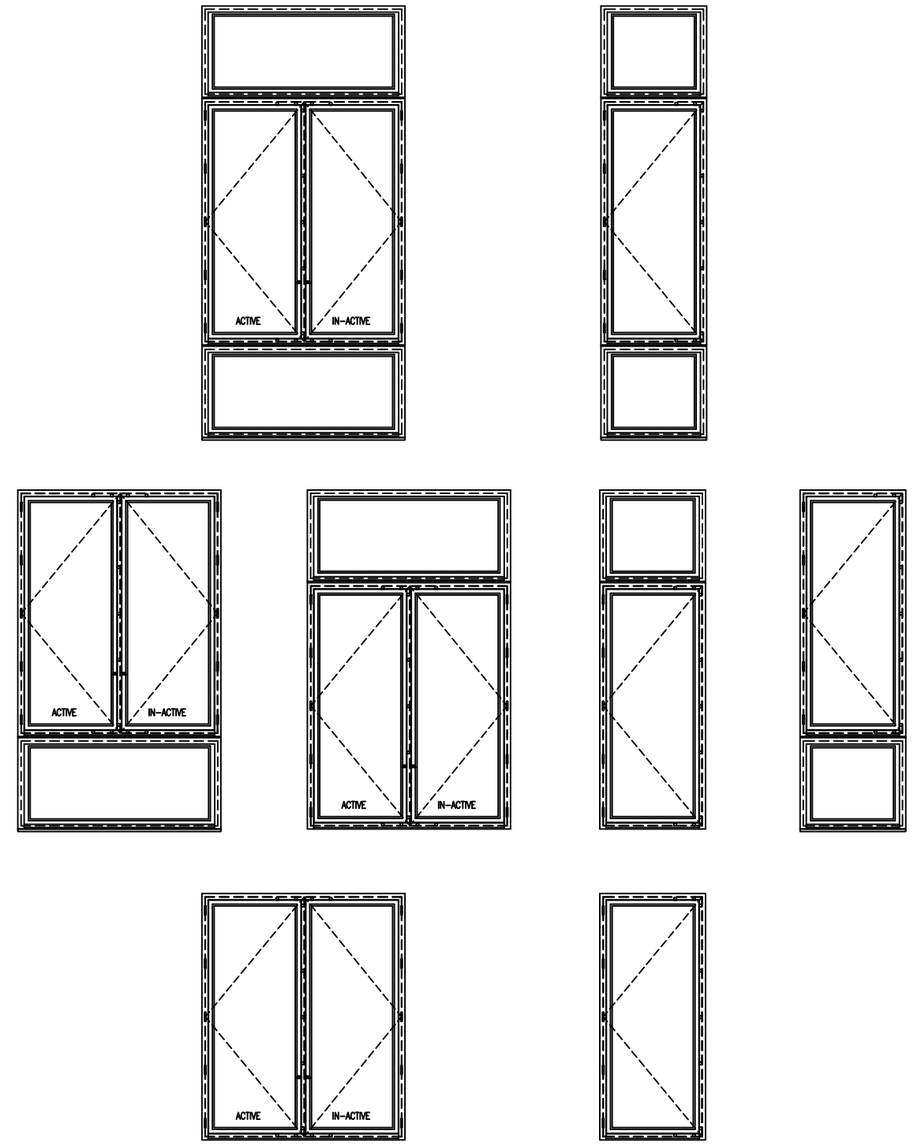

QUALIFIED CONFIGURATIONS

QUALIFIED CONFIGURATIONS NOTES:
1. SHOWN CONFIGURATIONS ARE QUALIFIED BASED ON TESTING SUCH THAT THEY DO NOT EXCEED THE MAXIMUM D.L.O. OR SASH DIMENSIONS SHOWN ON ELEVATION.
2. ACTIVE AND INACTIVE PANELS MAY BE REVERSED.

REILLY ARCHITECTURAL
901 BURMAN BLVD, BUILDING 701
CALVERTON, NY 11933
PH: 631-208-0710 FAX: 631-208-0711
EMAIL: WWW.REILLYARCH.COM

TITLE: SERIES 4170 INSWING CASEMENT WINDOW (HVHZ)(IMPACT) ELEVATION & QUALIFIED CONFIGURATIONS

PREPARED BY:
BUILDING DROPS, INC.
1900 NE MIAMI COURT, STE. 2-15
MIAMI, FL 33132
PH: (954)399-8478
FAX: (954)744.4738
WEB: www.buildingdrops.com

REMARKS	BY	DATE
2026 FBC UPDATE	LS	06/26

THE INSTALLATION DETAILS DESCRIBED HEREIN ARE GENERIC AND MAY NOT REFLECT ACTUAL CONDITIONS FOR A SPECIFIC SITE. IF SITE CONDITIONS CAUSE INSTALLATION TO DEVIATE FROM THE REQUIREMENTS DETAILED HEREIN, A LICENSED ENGINEER OR ARCHITECT SHALL PREPARE SITE SPECIFIC DOCUMENTS FOR USE WITH THIS DOCUMENT.

HERMES F. NORERO LICENSE No. 73778 STATE OF FLORIDA PROFESSIONAL ENGINEER

HERMES F. NORERO, P.E.
FLORIDA P.E. No. 73778
BUILDING DROPS, INC.
1900 NE MIAMI COURT, STE. 2-15
MIAMI, FL 33132
FBPE CERT. OF AUTHORIZATION No. 29578

FL #: FL48048

DATE: 03.11.2026

DWG. BY: DB | CHK. BY: HFN

SCALE: NTS

DWG. #: RWD032

SHEET: 4 | REV. A

OF 10

7/9/2026 3:17 PM
c:\users\lucianosanchez\building drops, inc\building drops landing - documents\common\projects\2026 code change projects\reilly architectural\cc-26-0587.1 - 2026 code change\dwgs\fl48048-r1\rwd032.dwg

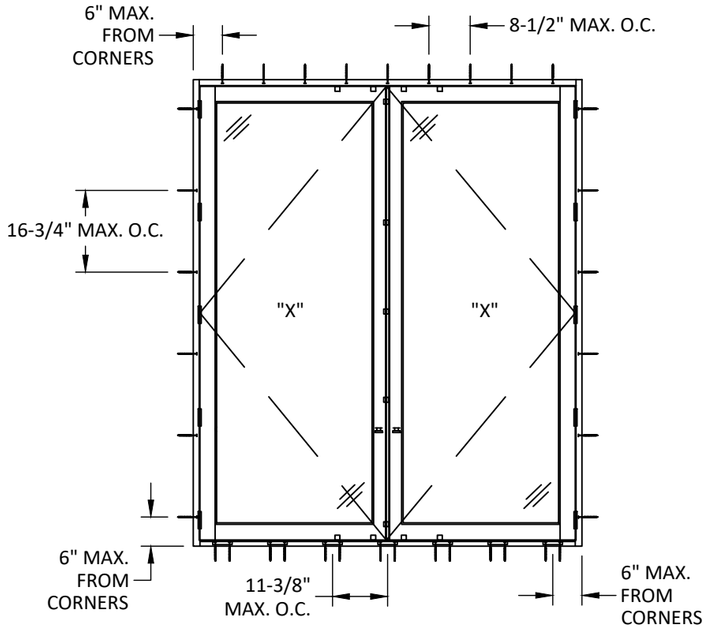

ANCHOR LAYOUT

THROUGH FRAME - HEAD & JAMBS
ANGLE CLIP - SILL

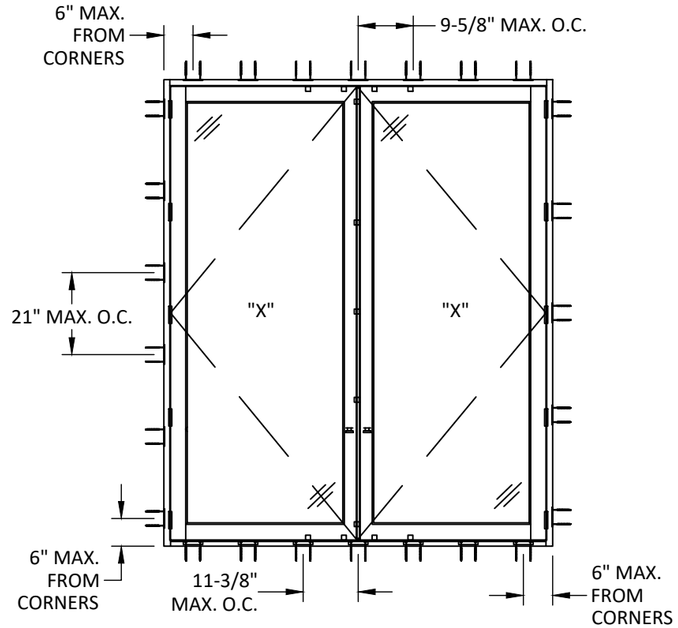

ANCHOR LAYOUT

FLAT CLIP - HEAD & JAMBS
ANGLE CLIP - SILL

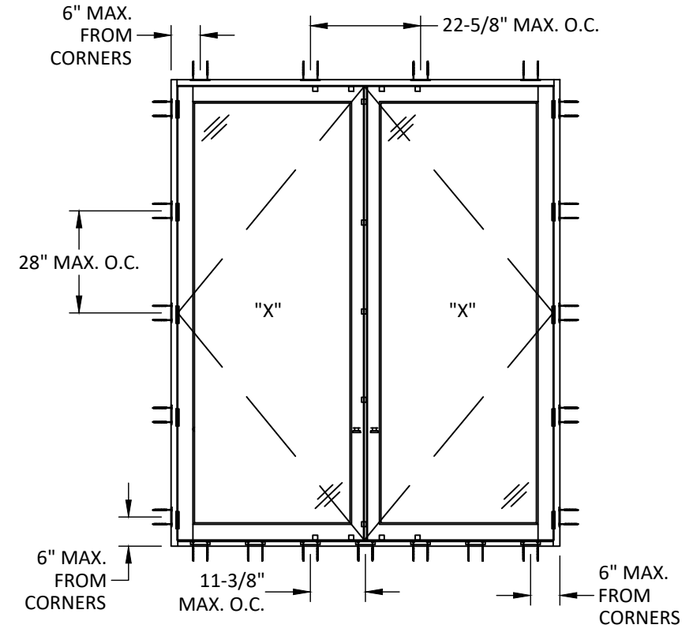

ANCHOR LAYOUT

ANGLE CLIP - HEAD & JAMBS
ANGLE CLIP - SILL

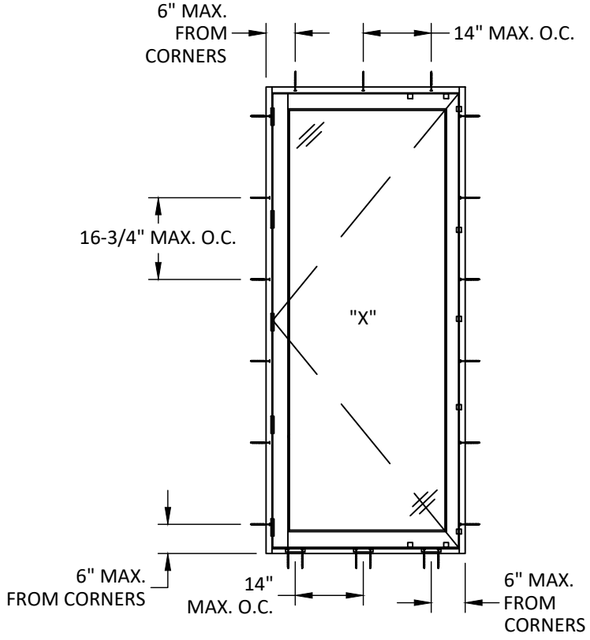

ANCHOR LAYOUT

THROUGH FRAME - HEAD & JAMBS
ANGLE CLIP - SILL

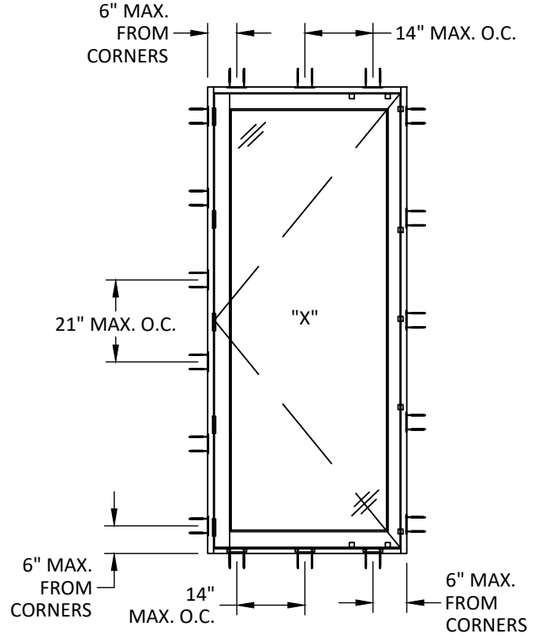

ANCHOR LAYOUT

FLAT CLIP - HEAD & JAMBS
ANGLE CLIP - SILL

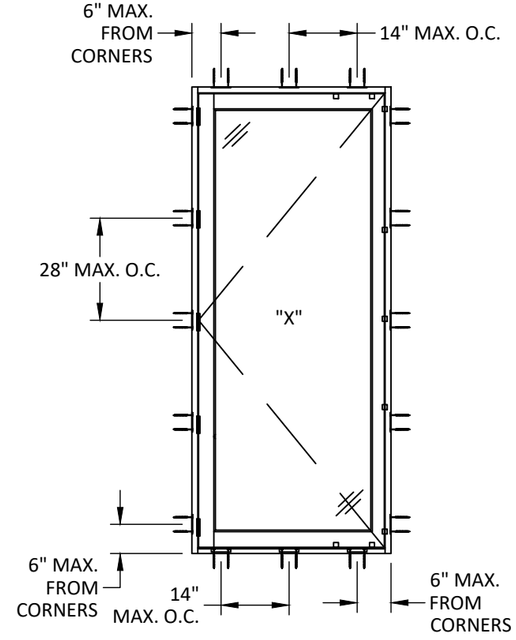

ANCHOR LAYOUT

ANGLE CLIP - HEAD & JAMBS
ANGLE CLIP - SILL

REILLY ARCHITECTURAL
901 BURMAN BLVD, BUILDING 701
CALVERTON, NY 11933
PH: 631-208-0710 FAX: 631-208-0711
EMAIL: WWW.REILLYARCH.COM

TITLE: SERIES 4170 INSWING CASEMENT WINDOW (HVHZ)(IMPACT) ANCHOR LAYOUTS

PREPARED BY: BUILDING DROPS, INC.
1900 NE MIAMI COURT, STE. 2-15
MIAMI, FL 33132
PH: (954)399-8478
FAX: (954)744.4738
WEB: www.buildingdrops.com

REMARKS	BY	DATE
2026 FBC UPDATE	LS	06/26

THE INSTALLATION DETAILS DESCRIBED HEREIN ARE GENERIC AND MAY NOT REFLECT ACTUAL CONDITIONS FOR A SPECIFIC SITE. IF SITE CONDITIONS CAUSE INSTALLATION TO DEVIATE FROM THE REQUIREMENTS DETAILED HEREIN, A LICENSED ENGINEER OR ARCHITECT SHALL PREPARE SITE SPECIFIC DOCUMENTS FOR USE WITH THIS DOCUMENT.

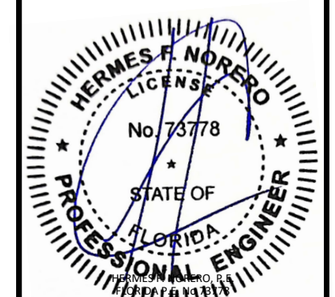

HERMES F. NORERO, P.E.
FLORIDA P.E. No. 73778
BUILDING DROPS, INC.
1900 NE MIAMI COURT, STE. 2-15
MIAMI, FL 33132
FBPE CERT. OF AUTHORIZATION No. 29578

FL #: FL48048

DATE: 03.11.2026

DWG. BY: DB | CHK. BY: HFN

SCALE: NTS

DWG. #: RWD032

SHEET: 5 | REV. A

OF 10

7/9/2026 3:17 PM
c:\users\lucianosanchez\building drops, inc\building drops landing - documents\common\projects\2026 code change projects\reilly architectural\cc-26-0587.1 - 2026 code change\dwgs\fl48048-r1\rwd032.dwg

LOCK REQUIREMENTS:
1) SPACING OF PRIMARY SASH LOCK LOCATIONS AT THE LOCK STILE SHALL NOT EXCEED THE MAXIMUM TESTED SPACING OF 27.25"
2) QUANTITY REQUIRED AT HEAD AND SILL STILES APPLIES TO BOTH PRIMARY AND SECONDARY SASHES ON TWIN UNITS

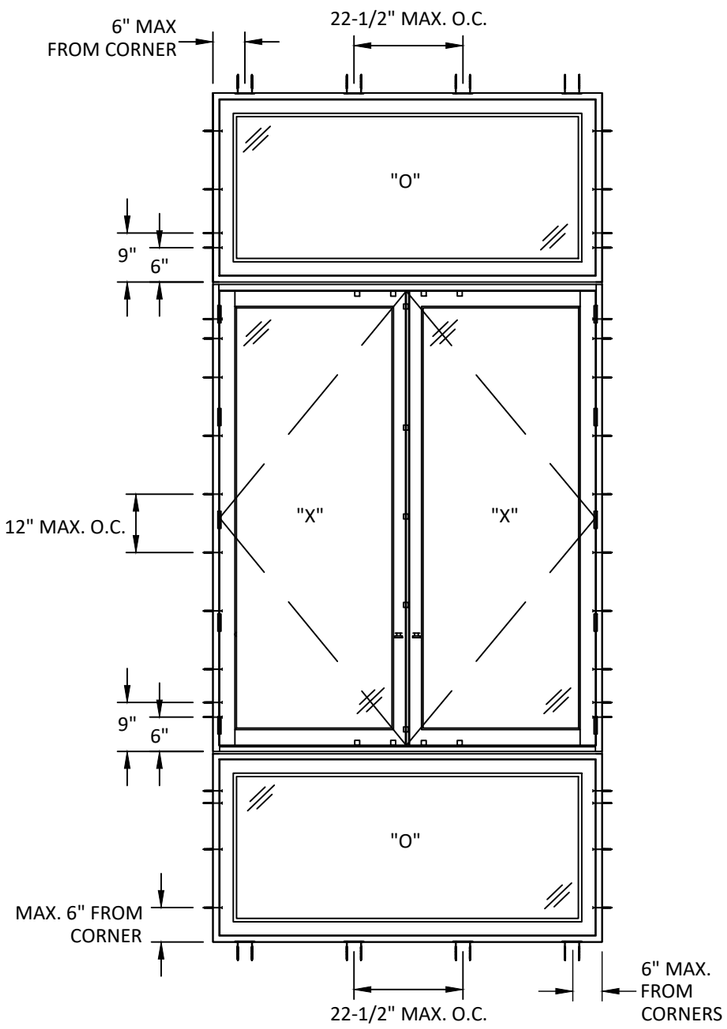

ANCHOR LAYOUT

FLAT CLIP OR ANGLE CLIP - HEAD
THROUGH FRAME - JAMBS
ANGLE CLIP - SILL

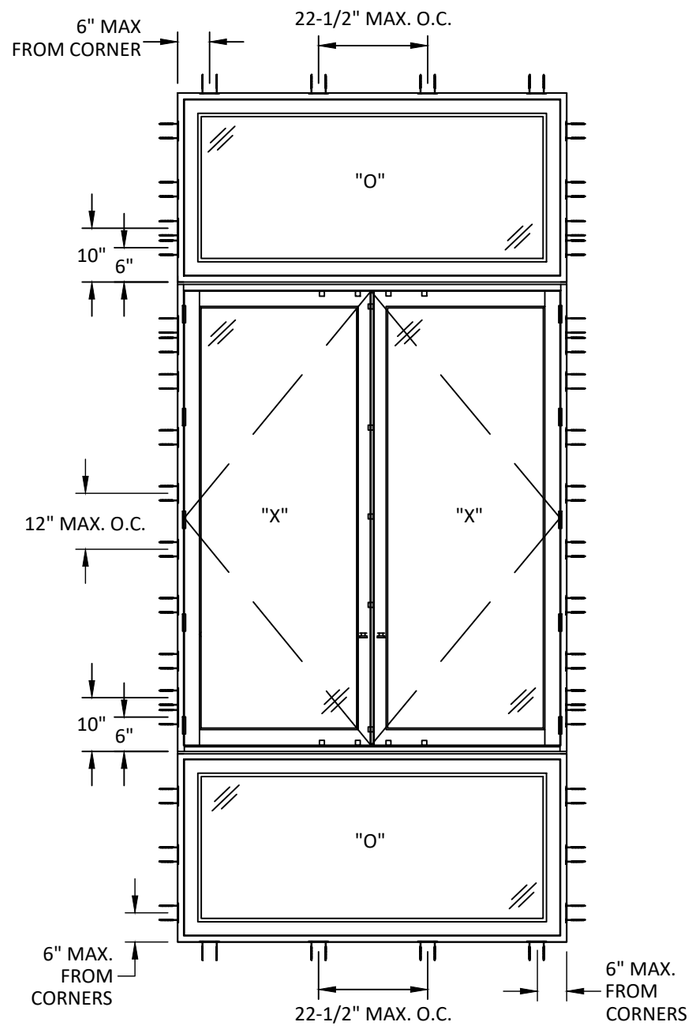

ANCHOR LAYOUT

FLAT CLIP OR ANGLE CLIP - HEAD & JAMBS
ANGLE CLIP - SILL

MINIMUM REQUIRED LOCK LOCATIONS

SASH SIZE		QUANTITY AT LOCK JAMB	QUANTITY AT HEAD/SILL
HEIGHT	WIDTH		
96.125	39.75	5	2
96.125	35	5	2
96.125	30	4	2
96.125	25	4	2
96.125	20	3	2
90.00	39.75	5	2
90.00	35	5	2
90.00	30	4	2
90.00	25	3	2
90.00	20	3	1
85.00	39.75	5	2
85.00	35	4	2
85.00	30	4	2
85.00	25	3	2
85.00	20	3	1
80.00	39.75	5	2
80.00	35	4	2
80.00	30	4	2
80.00	25	3	2
80.00	20	3	1
75.00	39.75	4	2
75.00	35	4	2
75.00	30	3	2
75.00	25	3	1
75.00	20	2	1
70.00	39.75	4	2
70.00	35	4	2
70.00	30	3	2
70.00	25	3	1
70.00	20	2	1
65.00	39.75	4	2
65.00	35	3	2
65.00	30	3	2
65.00	25	3	1
65.00	20	2	1
60.00	39.75	4	2
60.00	35	3	2
60.00	30	3	1
60.00	25	2	1
60.00	20	2	1
55.00	39.75	3	2
55.00	35	3	2
55.00	30	3	1
55.00	25	2	1
55.00	20	2	1

REILLY ARCHITECTURAL
901 BURMAN BLVD, BUILDING 701
CALVERTON, NY 11933
PH: 631-208-0710 FAX: 631-208-0711
EMAIL: WWW.REILLYARCH.COM

TITLE: SERIES 4170 INSWING CASEMENT WINDOW (HVHZ)(IMPACT) ANCHOR LAYOUTS & LOCK QUANTITY TABLE

PREPARED BY:
BUILDING DROPS, INC.
1900 NE MIAMI COURT, STE. 2-15
MIAMI, FL 33132
PH: (954)399-8478
FAX: (954)744.4738
WEB: www.buildingdrops.com

REMARKS	BY	DATE
2026 FBC UPDATE	LS	06/26

THE INSTALLATION DETAILS DESCRIBED HEREIN ARE GENERIC AND MAY NOT REFLECT ACTUAL CONDITIONS FOR A SPECIFIC SITE. IF SITE CONDITIONS CAUSE INSTALLATION TO DEVIATE FROM THE REQUIREMENTS DETAILED HEREIN, A LICENSED ENGINEER OR ARCHITECT SHALL PREPARE SITE SPECIFIC DOCUMENTS FOR USE WITH THIS DOCUMENT.

HERMES F. NORERO
LICENSE
No. 73778
STATE OF
FLORIDA
PROFESSIONAL ENGINEER

HERMES F. NORERO, P.E.
REGISTERED NAME
BUILDING DROPS, INC.
1900 NE MIAMI COURT, STE. 2-15
MIAMI, FL 33132
FBPE CERT. OF AUTHORIZATION No. 29578

FL #: FL48048

DATE: 03.11.2026

DWG. BY: DB | CHK. BY: HFN

SCALE: NTS

DWG. #: RWD032

SHEET: 6 OF 10 | REV. A

7/9/2026 3:17 PM
c:\users\lucianosanchez\building drops, inc\building drops landing - documents\common\projects\2026 code change projects\reilly architectural\cc-26-0587.1 - 2026 code change\dwgs\fl48048-r1\rwd032.dwg

7/9/2026 3:17 PM
c:\users\lucianosanchez\building drops, inc\building drops landing - documents\common\projects\2026 code change projects\reilly architectural\cc-26-0587.1 - 2026 code change\dwgs\fl48048-r1\rwd032.dwg

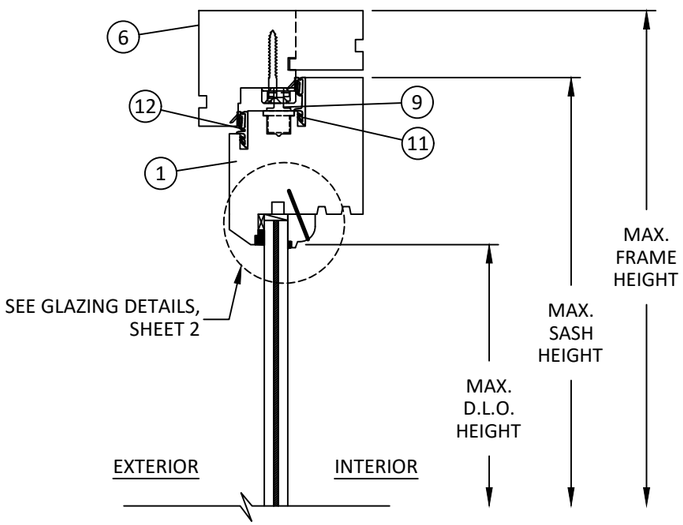

A/7 VERTICAL SECTION
CASEMENT HEAD

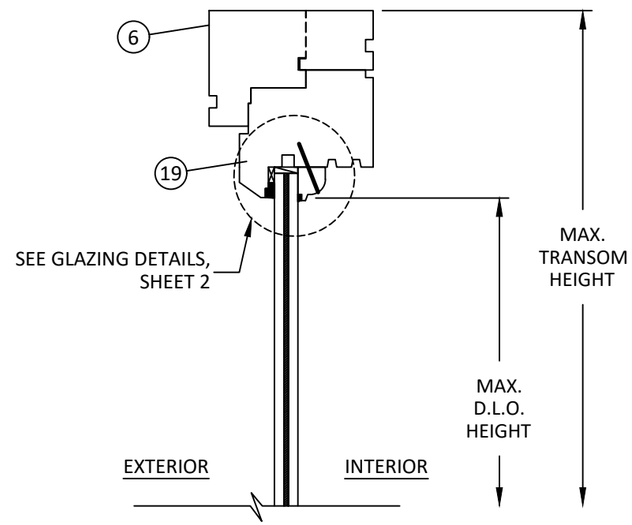

B/7 VERTICAL SECTION
TRANSOM HEAD

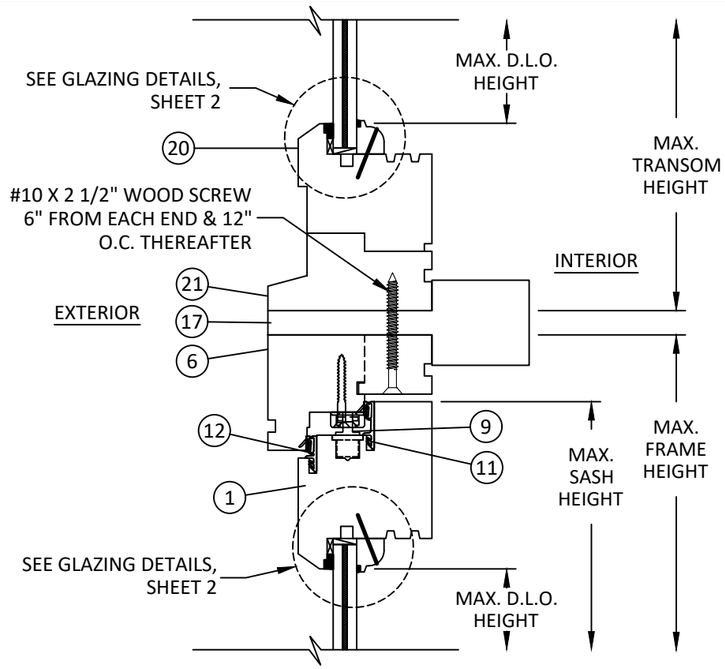

C/7 VERTICAL SECTION
HORIZONTAL MULLION (WOOD)

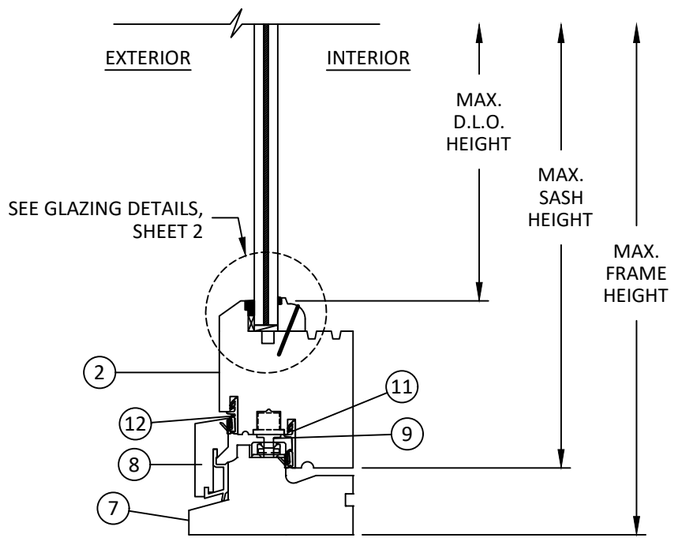

D/7 VERTICAL SECTION
CASEMENT SILL

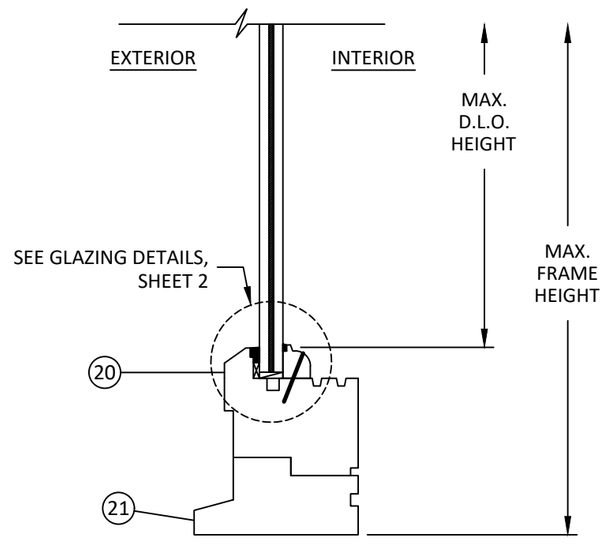

E/7 VERTICAL SECTION
TRANSOM SILL

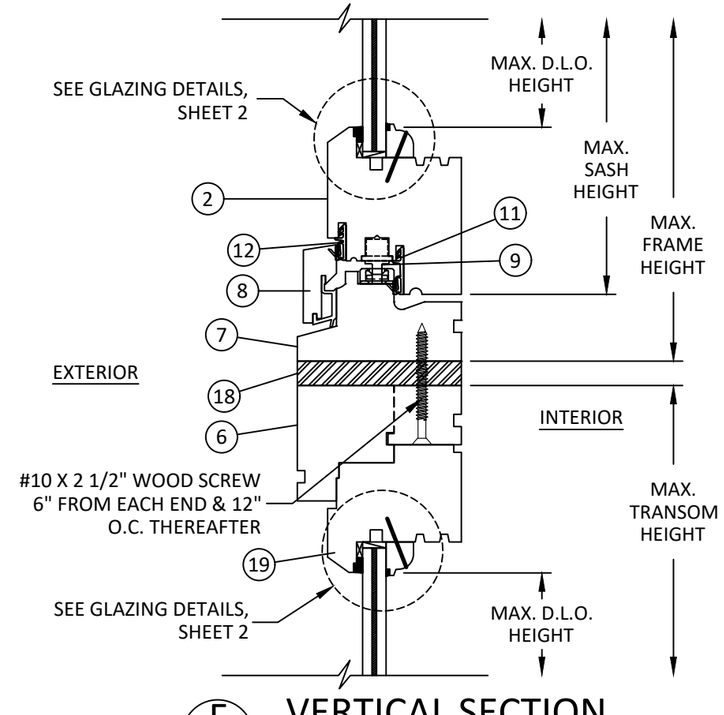

F/7 VERTICAL SECTION
HORIZONTAL MULLION (STEEL)

REILLY ARCHITECTURAL
901 BURMAN BLVD, BUILDING 701
CALVERTON, NY 11933
PH: 631-208-0710 FAX: 631-208-0711
EMAIL: WWW.REILLYARCH.COM

TITLE: SERIES 4170 INSWING CASEMENT WINDOW (HVHZ)(IMPACT) VERTICAL SECTIONS

PREPARED BY:
BUILDING DROPS, INC.
1900 NE MIAMI COURT, STE. 2-15
MIAMI, FL 33132
PH: (954)399-8478
FAX: (954)744.4738
WEB: www.buildingdrops.com

REMARKS	BY	DATE
2026 FBC UPDATE	LS	06/26

THE INSTALLATION DETAILS DESCRIBED HEREIN ARE GENERIC AND MAY NOT REFLECT ACTUAL CONDITIONS FOR A SPECIFIC SITE. IF SITE CONDITIONS CAUSE INSTALLATION TO DEVIATE FROM THE REQUIREMENTS DETAILED HEREIN, A LICENSED ENGINEER OR ARCHITECT SHALL PREPARE SITE SPECIFIC DOCUMENTS FOR USE WITH THIS DOCUMENT.

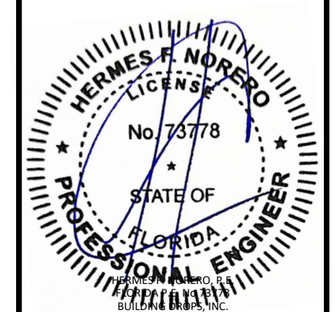

HERMES F. NORERO, P.E.
FLORIDA P.E. No. 73778
BUILDING DROPS, INC.
1900 NE MIAMI COURT, STE. 2-15
MIAMI, FL 33132
FBPE CERT. OF AUTHORIZATION No. 29578

FL #: FL48048

DATE: 03.11.2026

DWG. BY: DB | CHK. BY: HFN

SCALE: NTS

DWG. #: RWD032

SHEET: 7 | REV. A

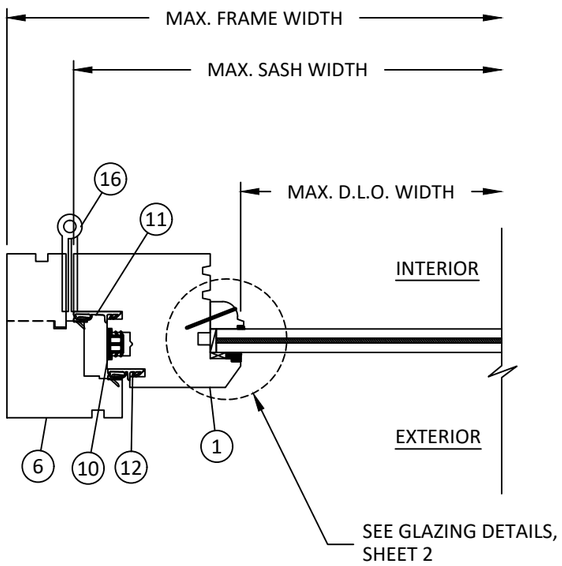

A/8 HORIZONTAL SECTION
CASEMENT JAMB

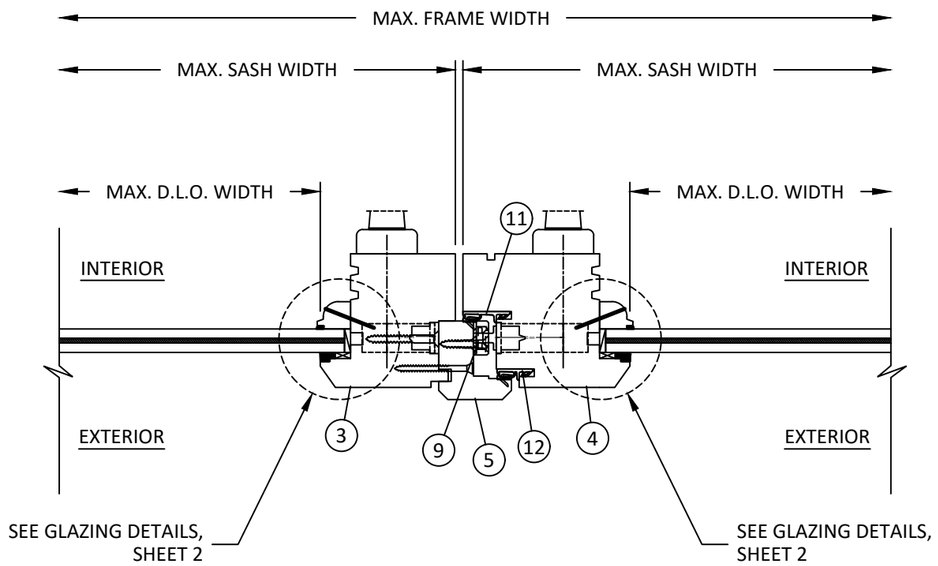

B/8 HORIZONTAL SECTION
FRENCH CASEMENT MEETING STILE

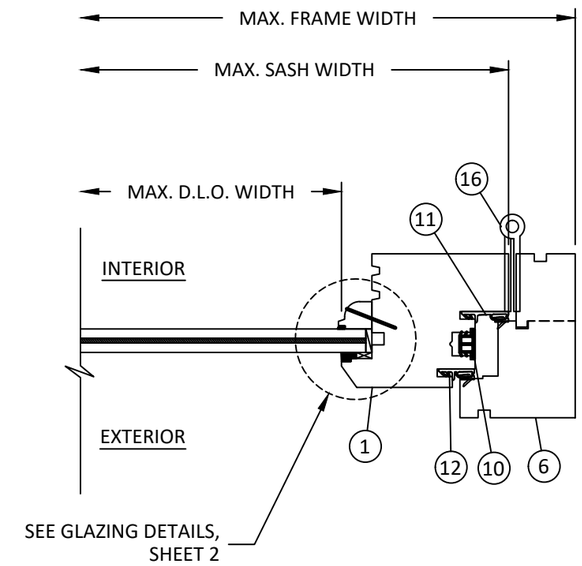

C/8 HORIZONTAL SECTION
CASEMENT JAMB

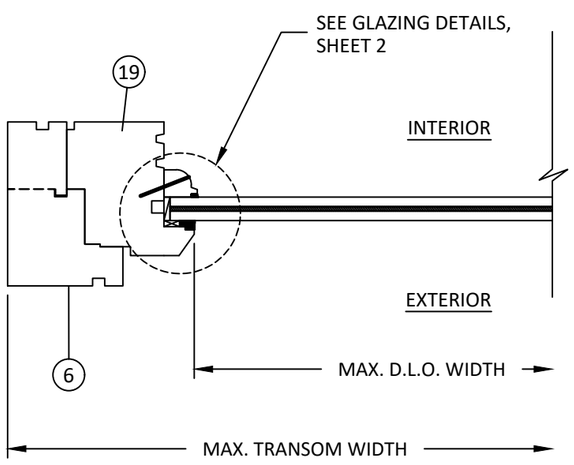

D/8 HORIZONTAL SECTION
TRANSOM JAMB

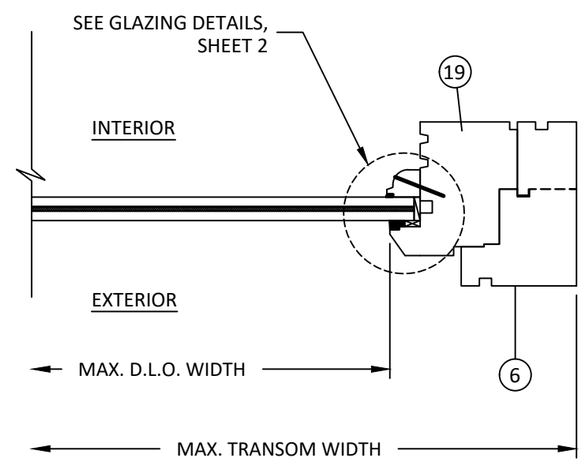

E/8 HORIZONTAL SECTION
TRANSOM JAMB

REILLY ARCHITECTURAL
901 BURMAN BLVD, BUILDING 701
CALVERTON, NY 11933
PH: 631-208-0710 FAX: 631-208-0711
EMAIL: WWW.REILLYARCH.COM

TITLE: SERIES 4170 INSWING CASEMENT WINDOW (HVHZ)(IMPACT) HORIZONTAL SECTIONS

PREPARED BY:
BUILDING DROPS, INC.
1900 NE MIAMI COURT, STE. 2-15
MIAMI, FL 33132
PH: (954)399-8478
FAX: (954)744.4738
WEB: www.buildingdrops.com

REMARKS	BY	DATE
2026 FBC UPDATE	LS	06/26

THE INSTALLATION DETAILS DESCRIBED HEREIN ARE GENERIC AND MAY NOT REFLECT ACTUAL CONDITIONS FOR A SPECIFIC SITE. IF SITE CONDITIONS CAUSE INSTALLATION TO DEVIATE FROM THE REQUIREMENTS DETAILED HEREIN, A LICENSED ENGINEER OR ARCHITECT SHALL PREPARE SITE SPECIFIC DOCUMENTS FOR USE WITH THIS DOCUMENT.

HERMES F. NORERO, P.E.
FLORIDA P.E. No. 73778
BUILDING DROPS, INC.
1900 NE MIAMI COURT, STE. 2-15
MIAMI, FL 33132
FBPE CERT. OF AUTHORIZATION No. 29578

FL #: FL48048

DATE: 03.11.2026

DWG. BY: DB | CHK. BY: HFN

SCALE: NTS

DWG. #: RWD032

SHEET: 8 OF 10 | REV. A

7/9/2026 3:17 PM
c:\users\lucianosanchez\building drops, inc\building drops landing - documents\common\projects\2026 code change projects\reilly architectural\cc-26-0587.1 - 2026 code change\dwgs\fl48048-r1\rwd032.dwg

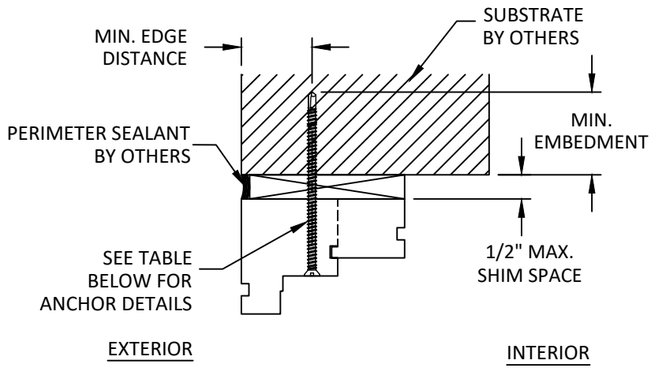

A/9 ANCHOR DETAIL

HEAD - THROUGH FRAME
JAMB SIMILAR

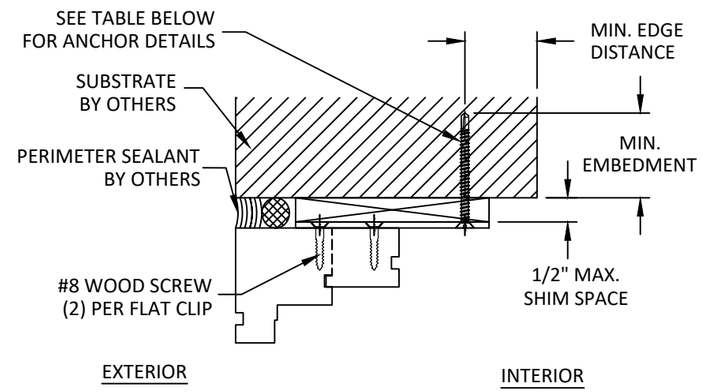

B/9 ANCHOR DETAIL

HEAD - FLAT CLIP
JAMB SIMILAR

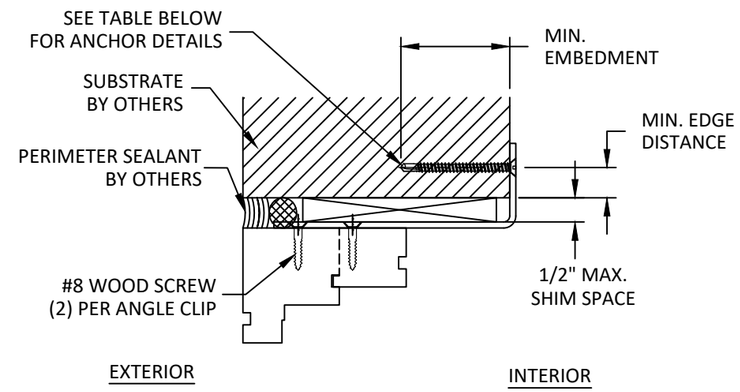

C/9 ANCHOR DETAIL

HEAD - ANGLE CLIP
JAMB SIMILAR

ANCHOR SCHEDULE					
METHOD	QUANTITY PER LOCATION	SUBSTRATE	ANCHOR TYPE	MIN. EMBEDMENT	MIN. EDGE DISTANCE
THROUGH FRAME	1	WOOD: MIN. SG = 0.55	#12 WOOD SCREW	1.50"	0.75"
		METAL: 18 GAUGE STEEL, MIN. Fy = 33KSI ALUMINUM: 1/8" MIN., 6063-T5	#12 SELF-DRILLING SCREW	3 THREADS MIN PENETRATION BEYOND STRUCTURE	0.50"
		CONCRETE: f'c=3000PSI	1/4" ITW TAPCON	1.25"	2.50"
		MASONRY: CMU per ASTM C90 MIN. 2000 PSI	1/4" ITW TAPCON	1.00"	2.50"
FLAT CLIP/ SILL ANGLE CLIP	2	WOOD: MIN. SG = 0.55	#10 WOOD SCREW	1.50"	0.75"
		METAL: 18 GAUGE STEEL, MIN. Fy = 33KSI ALUMINUM: 1/8" MIN., 6063-T5	#10 SELF-DRILLING SCREW	3 THREADS MIN PENETRATION BEYOND STRUCTURE	0.50"
		CONCRETE: f'c=3000PSI	3/16" ITW TAPCON	1.00"	2.00"
		MASONRY: CMU per ASTM C90 MIN. 2000 PSI	3/16" ITW TAPCON	1.00"	2.00"
ANGLE CLIP	2	WOOD: MIN. SG = 0.55	#10 WOOD SCREW	1.50"	0.75"
		METAL: 18 GAUGE STEEL, MIN. Fy = 33KSI ALUMINUM: 1/8" MIN., 6063-T5	#10 SELF-DRILLING SCREW	3 THREADS MIN PENETRATION BEYOND STRUCTURE	0.50"

NOTE: TRANSOM CAN ONLY BE INSTALLED USING FLAT CLIP INSTALLATION OR ANGLE CLIP INSTALLATION.

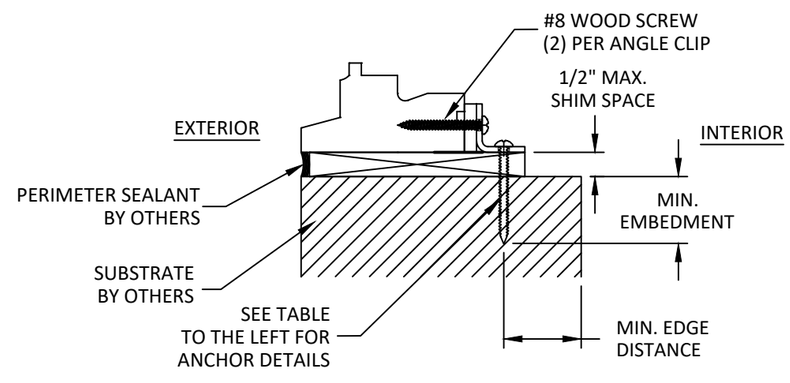

D/9 ANCHOR DETAIL

SILL - ANGLE CLIP

NOTE: SILL USES ITS OWN ANGLE CLIP REGARDLESS OF INSTALLATION METHOD AT THE HEAD/JAMBS.

REILLY ARCHITECTURAL
901 BURMAN BLVD, BUILDING 701
CALVERTON, NY 11933
PH: 631-208-0710 FAX: 631-208-0711
EMAIL: WWW.REILLYARCH.COM

TITLE: SERIES 4170 INSWING CASEMENT WINDOW (HVHZ)(IMPACT) ANCHOR DETAILS & ANCHOR SCHEDULE

PREPARED BY: BUILDING DROPS, INC.
1900 NE MIAMI COURT, STE. 2-15
MIAMI, FL 33132
PH: (954)399-8478
FAX: (954)744.4738
WEB: www.buildingdrops.com

REMARKS	BY	DATE
2026 FBC UPDATE	LS	06/26

THE INSTALLATION DETAILS DESCRIBED HEREIN ARE GENERIC AND MAY NOT REFLECT ACTUAL CONDITIONS FOR A SPECIFIC SITE. IF SITE CONDITIONS CAUSE INSTALLATION TO DEVIATE FROM THE REQUIREMENTS DETAILED HEREIN, A LICENSED ENGINEER OR ARCHITECT SHALL PREPARE SITE SPECIFIC DOCUMENTS FOR USE WITH THIS DOCUMENT.

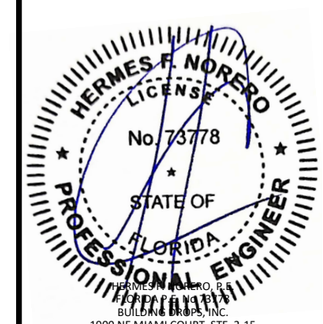

HERMES F. NORERO, P.E.
FLORIDA LICENSE NO. 73778
BUILDING DROPS, INC.
1900 NE MIAMI COURT, STE. 2-15
MIAMI, FL 33132
FBPE CERT. OF AUTHORIZATION No. 29578

FL #: FL48048

DATE: 03.11.2026

DWG. BY: DB | CHK. BY: HFN

SCALE: NTS

DWG. #: RWD032

SHEET: 9 | REV. A

OF 10

7/9/2026 3:17 PM
c:\users\lucianosanchez\building drops, inc\building drops landing - documents\common\projects\2026 code change projects\reilly architectural\cc-26-0587.1 - 2026 code change\dwgs\fl48048-r1\rwd032.dwg

BILL OF MATERIALS			
ITEM	DESCRIPTION	MATERIAL	MANUFACTURER
1	STILE/TOP RAIL	MAHOGANY	REILLY
2	BOTTOM RAIL	MAHOGANY	REILLY
3	MEETING STILE	MAHOGANY	REILLY
4	MEETING STILE	MAHOGANY	REILLY
5	ASTRAGAL	MAHOGANY	REILLY
6	JAMB/HEAD	MAHOGANY	REILLY
7	SILL	MAHOGANY	REILLY
8	COVER	MAHOGANY	REILLY
9	MULTI-POINT LOCK	STEEL	VARIES
10	WEATHERSTRIP	SILICONE	DEVENTER
11	WEATHERSTRIP	SILICONE	DEVENTER
12	WEATHERSTRIP	SILICONE	DEVENTER
13	FLAT CLIP	ALUMINUM	VARIES
14	ANGLE CLIP	304 S.S.	VARIES
15	SILL ANGLE CLIP	304 S.S.	VARIES
16	HINGE	BRASS	REILLY
17	MULLION STIFFENER	MAHOGANY	REILLY
18	MULLION STIFFENER	STEEL	VARIES
19	TRANSOM TOP RAIL	MAHOGANY	REILLY
20	TRANSOM BOTTOM RAIL	MAHOGANY	REILLY
21	TRANSOM SILL	MAHOGANY	REILLY

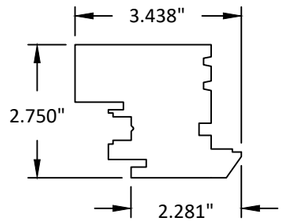

1 STILE/TOP RAIL
MAHOGANY

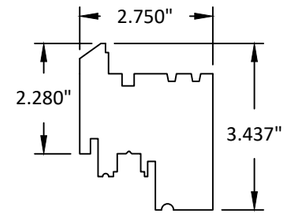

2 BOTTOM RAIL
MAHOGANY

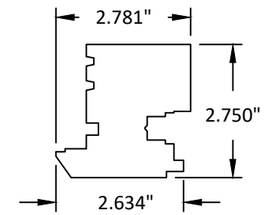

3 MEETING STILE
MAHOGANY

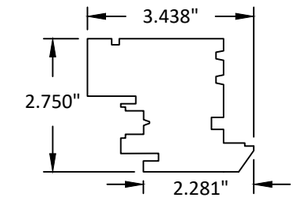

4 MEETING STILE
MAHOGANY

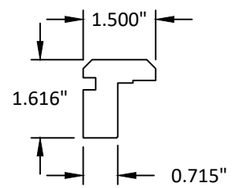

5 ASTRAGAL
MAHOGANY

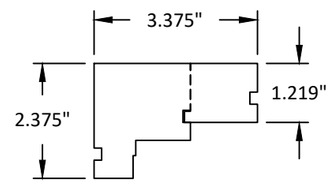

6 JAMB/HEAD
MAHOGANY

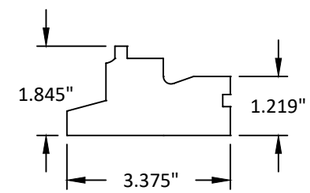

7 SILL
MAHOGANY

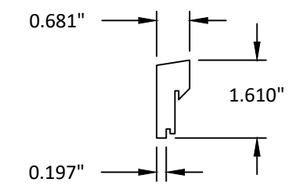

8 COVER
MAHOGANY

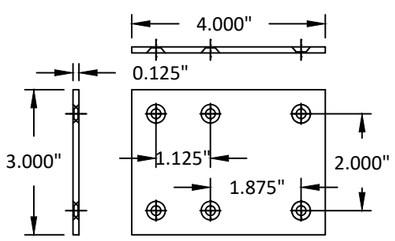

13 FLAT CLIP
ALUMINUM

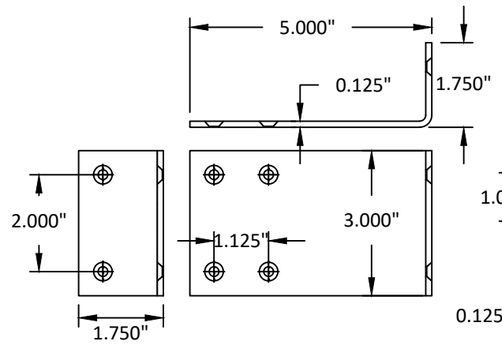

14 ANGLE CLIP
304 STAINLESS STEEL

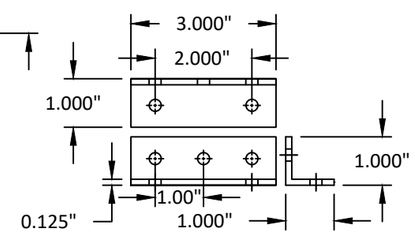

15 SILL ANGLE CLIP
304 STAINLESS STEEL

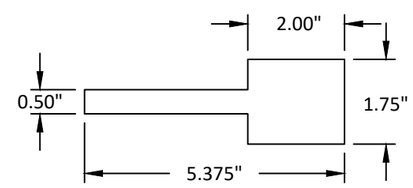

17 MULLION STIFFENER
MAHOGANY

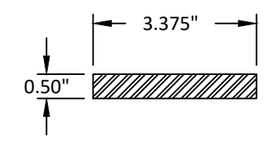

18 MULLION STIFFENER
STEEL

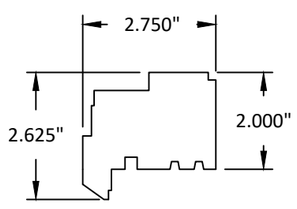

19 TRANSOM TOP RAIL/STILE
MAHOGANY

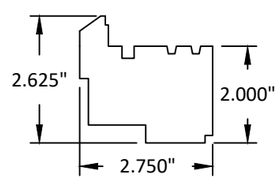

20 TRANSOM BOTTOM RAIL
MAHOGANY

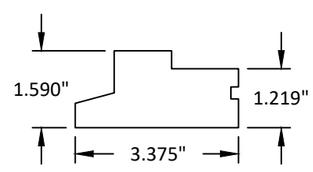

21 TRANSOM SILL
MAHOGANY

REILLY ARCHITECTURAL
901 BURMAN BLVD, BUILDING 701
CALVERTON, NY 11933
PH: 631-208-0710 FAX: 631-208-0711
EMAIL: WWW.REILLYARCH.COM

TITLE: SERIES 4170 INSWING CASEMENT WINDOW (HVHZ)(IMPACT) BILL OF MATERIALS & COMPONENTS

PREPARED BY:
BUILDING DROPS, INC.
1900 NE MIAMI COURT, STE. 2-15
MIAMI, FL 33132
PH: (954)399-8478
FAX: (954)744.4738
WEB: www.buildingdrops.com

REMARKS	BY	DATE
2026 FBC UPDATE	LS	06/26

THE INSTALLATION DETAILS DESCRIBED HEREIN ARE GENERIC AND MAY NOT REFLECT ACTUAL CONDITIONS FOR A SPECIFIC SITE. IF SITE CONDITIONS CAUSE INSTALLATION TO DEVIATE FROM THE REQUIREMENTS DETAILED HEREIN, A LICENSED ENGINEER OR ARCHITECT SHALL PREPARE SITE SPECIFIC DOCUMENTS FOR USE WITH THIS DOCUMENT.

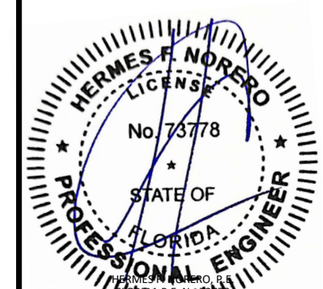

HERMES F. NORERO, P.E.
FLORIDA P.E. No. 73778
BUILDING DROPS, INC.
1900 NE MIAMI COURT, STE. 2-15
MIAMI, FL 33132
FBPE CERT. OF AUTHORIZATION No. 29578

FL #: FL48048

DATE: 03.11.2026

DWG. BY: DB | CHK. BY: HFN

SCALE: NTS

DWG. #: RWD032

SHEET: 10 | REV. A

OF 10

7/9/2026 3:17 PM
c:\users\lucianosanchez\building drops, inc\building drops landing - documents\common\projects\2026 code change projects\reilly architectural\cc-26-0587.1 - 2026 code change\dwgs\fl48048-r1\rwd032.dwg